Proceedings of ASME Turbo Expo 2014: Turbine Technical Conference and Exposition
GT2014
June 16 – 20, 2014, Düsseldorf, Germany
GT2014-25751

IMPROVEMENT OF FLAT-PLATE FILM COOLING PERFORMANCE BY DOUBLE FLOW CONTROL DEVICES: PART I – INVESTIGATIONS ON CAPABILITY OF A BASE-TYPE DEVICE

Ken-ichi FUNAZAKI, Ryota NAKATA, Hirokazu KAWABATA
Department of Mechanical Engineering
Iwate University, Morioka, Japan

Hisato TAGAWA, Yasuhiro HORIUCHI
Hitachi Research Laboratory, Hitachi, Ltd.
Ibaraki, Japan

ABSTRACT

This paper deals with effects of double flow control devices (DFCDs) on flat plate film cooling performance. Aiming for further improvement of film effectiveness of discrete cooling holes, this new type of controlling method is invented and recently patented by the authors. The performance of base-type DFCDs, installed just upstream of cooling holes with conventional round or fan-shaped exits, is thoroughly investigated and reported in this study. Effects of the hole pitch are examined. Three hole-pitch cases, 3.0 d, 4.5 d and 6.0 d are examined in this study to explore a possibility of reducing the cooling air by the application of DFCDs, where d is a hole diameter. In order to investigate the film effectiveness, a transient method using a high-resolution infrared camera is adopted. At the downstream of the cooling hole, the time-averaged temperature field is captured by a thermocouple rake and the time-averaged velocity field is captured by 3D Laser Doppler Velocimeter (LDV), respectively. Furthermore, the aerodynamic loss characteristics of the cooling hole with and without DFCDs are measured by a total pressure probe rake. The experiments are carried out for two blowing ratios, 0.5 and 1.0. It is found that DFCDs are quite effective in increasing the film effectiveness not only for round but also the fan-shaped holes.

Starting from the base-type device, a robust optimization using Taguchi Method has been made by the present authors and will be reported as Part II.

1. INTRODUCTION

Because of high-priced fossil fuel as well as serious concern about the global warming due to the large amount of consumption of the fossil fuel, development of gas turbines with high thermal efficiency has been an important challenge for industries and academia. Raising turbine inlet temperature (TIT) of gas turbine is a major contributor to the increase in gas turbine thermal efficiency, which has been mostly achieved by the development of sophisticated cooling technologies. Among these cooling technologies, film cooling from discrete holes is a key player in turbine cooling and a vast number of relevant studies have been made for decades ([1]-[7]). Bunker [8] presented an excellent and comprehensive review article on turbine film cooling technology, in which he concluded the most effective and practical advancement on film cooling has been the change in exit geometry of the cooling hole from round shape to fan shape or diffuser shape. He also referred to several geometries or configurations of film cooling holes, for example trench, crater or tab as an alternative to the fan shaped hole. Later, Bunker [9] picked up thirty newly proposed film hole geometries from a number of published papers and gave each of them his personal evaluation according to 8 judgment factors.

Recently, Kawabata et al. [10] have proposed a new method to enhance the attachment of ejected cooling air from round holes on a flat-plate, in which a protrusion with hemi-spheroid shape is placed just upstream of each of the cooling holes. The concept of using the upstream protrusion, referred to as FCD (Flow-Control Device), is to generate streamwise vorticies by the protrusion in order to control counter-rotation vortex pair (CRVP) associated with the ejected cooling air so that the lift-off of the ejected air by CRVP is considerably suppressed. It was found through the detailed flow measurements downstream of the cooling hole using 3D LDV (Laser-Doppler Velocimetry) that the vorticies from FCD with 50%-75% hole diameter off-set distance from the cooling hole effectively interacted with the ejected air, supressing the growth of its CRVP and enhancing the cooling air attachment to the flat-plate surface. The thermal measurement using IR (Infrared) camera revealed that the application of FCD was able to bring about more than two-fold increase in lateral-averaged film-effectiveness in comparison with the baseline case. However, 20%-30% rise in total pressure loss was also confirmed due to FCD. Besides, due to the off-set distance from the centreline of the cooling hole, the benefit attained by the off-set FCD seemed to be

Copyright © 2014 by ASME

cancelled when the main flow angle varied in a way such that the wake from the device covered the cooling hole.

This paper proposes a new protrusion-type FCD to overcome the above-mentioned drawbacks while maintaining at least the same level as and hopefully attaining higher level of film-effectiveness enhancement than the previous device. The new model, invented and patented by the authors, referred to as base-type DFCD (Double Flow-Control Device), is a pair of protrusions with the shape of hemi-spheroid attached to the flat plate just upstream of each of cooling holes. In the previous study [10], only cooling holes with conventional round-shaped exit were investigated and no information was available on how the device would work on cooling air from holes with a different exit shape. Therefore the base-type DFCD is applied to cooling holes with not only conventional round but also fan-shaped exits, and the performance of the device is thoroughly investigated and reported in this study. The purpose of the three hole-pitch cases, 3.0 d, 4.5 d and 6.0 d, are examined to explore a possibility of reducing the cooling air by the application of the DFCD, where d is a hole diameter. In order to investigate the film effectiveness, a transient method using a high-resolution infrared camera is adopted. At the downstream of the cooling hole, the time-averaged temperature field is captured by a thermocouple rake and the time-averaged velocity field is captured by 3D Laser Doppler Velocimeter (LDV), respectively. Furthermore, the aerodynamic loss characteristics of the cooling hole with and without DFCD are measured by a total pressure probe rake.

2. EXPERIMENTS

2.1 Test Model

Figure 1 shows the test model used in this study. It consisted of two parts, which were Base Block and Hole Block. These two parts were made of ABS (Acrylonitrile Butadiene Styrene) resin whose thermal properties such as specific heat, thermal conductivity were measured in detail. It was found that the thermal conductivity, specific heat and density of the test model material was 0.214 W/mK, 1.42 kJ/kgK and 1.031kg/m^3 at room temperature, respectively. Base Block, 840mm long, 440mm wide and 40mm thick, contained an opening into which Hole Block was inserted from the back side. Six different Hole Blocks were manufactured, each of which had a row of three cooling holes with round or fan-shaped hole exit shape. The row was perpendicular to the longitudinal (streamwise) direction of Base Block. The detail of the hole geometry was depicted in Figure 2. As for the cooling hole with round exit, which will be called RH, the hole diameter d was 20 mm and the axis angle α was 35 deg. Accordingly, the hole length L was 69.7 mm or L/d =3.49. The hole with fan-shaped exit, referred to as SH, had the same hole diameter with RH from the inlet until 1.75 d downstream, followed by the lateral expansion and laid-back. The semi-expansion angle γ and the laid-back angle β were 10 deg. The shape of the hole with SH was based on what Renze et al. [11] and Sakai et al. [12] employed in their studies. This type of hole exit shape was selected because the windward half of the exit shape was almost the same as that of RH and it was easy to establish the position of DFCDs relative to the hole exit.

As for the coordinate system, x coordinate was aligned with the streamwise direction, y coordinate was normal to the model surface and z coordinate was in the hole-pitch direction. The coordinate origin was located at the most downstream point for RH and SH, as shown in Figure 2. In addition, three hole pitch cases were examined in this study, which were 3.0 d, 4.5 d and 6.0 d.

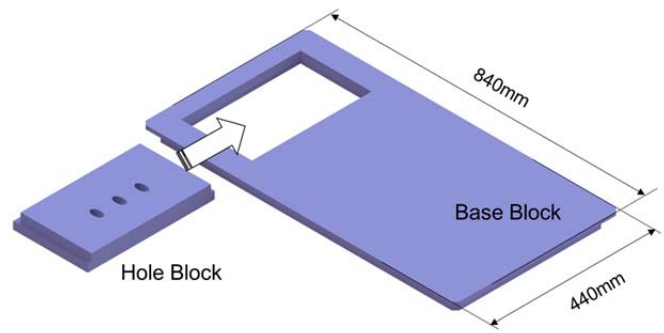

Figure 1 Test model

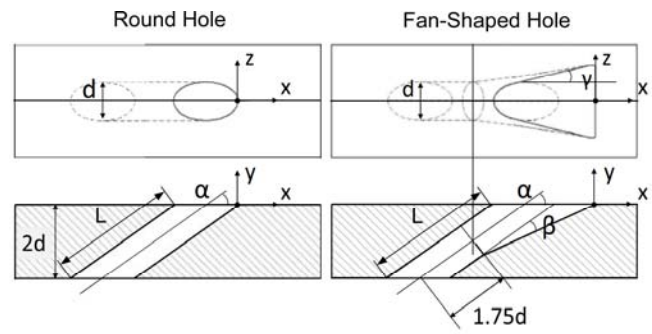

Figure 2 Hole geometry
(left: round hole, right: fan-shaped hole)

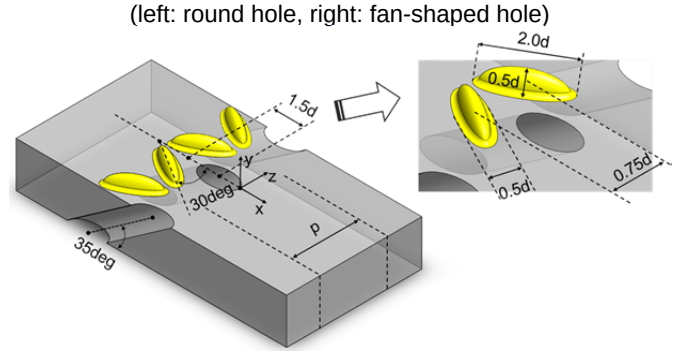

Figure 3 Dimensions and arrangement of Double Flow-Control Devices

2.2 Double Flow-Control Devices

Figure 3 demonstrates two protrusion-type devices called base-type Double Flow-Control Devices (DFCDs). The devices consisted of two hemi-spheroid shaped protrusions with 2.0 d length, 0.5 d width, 0.5 d height and 0.15 d fillet. The two devices used in this study were manufactured by use of a 3D printer (Dimension Elite, Stratasys), polished and glued on each of the hole blocks. The major axis of each of the devices was inclined by ± 30 deg from the streamwise (x) direction. The device center was

Copyright © 2014 by ASME

distanced from the hole center by $1.5d$. Note that these dimensions were based on those investigated in the previous study [10], with the modification of the length in the major axis direction. The device arrangement was determined through a number of trials.

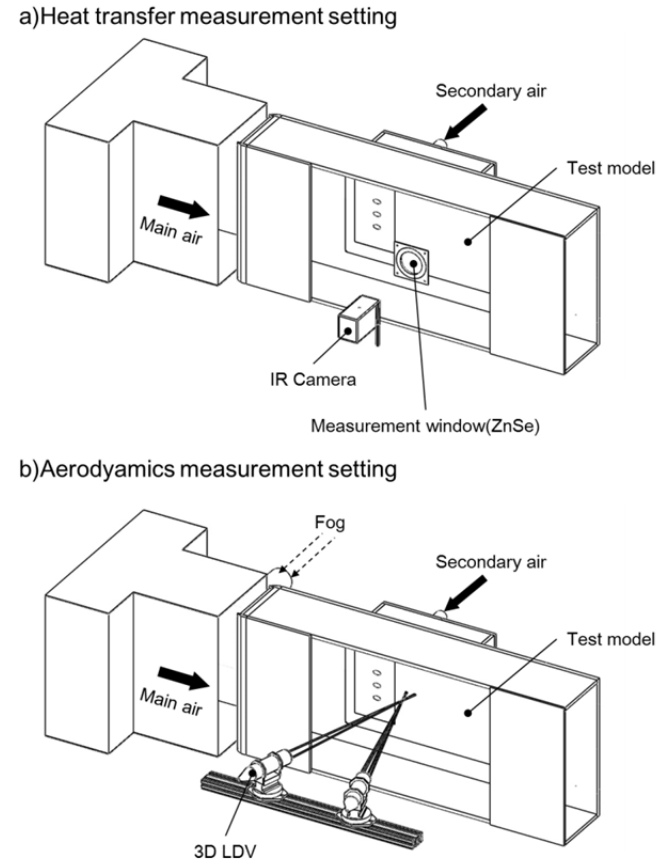

Figure 4 Test apparatus

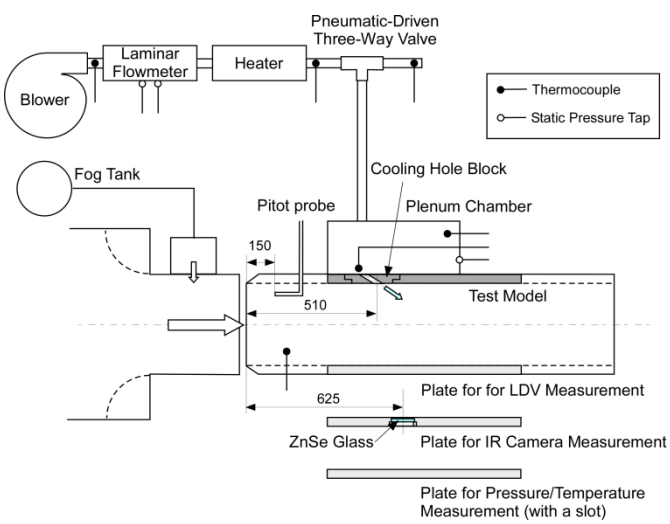

Figure 5 Schematic of the experimental setup and measurement system

2.3 Test Facility

All experiments were conducted using the large-scale semi-closed wind tunnel of Iwate University. Figure 4 shows the test apparatus including test duct, test model and some measurement instruments. The test duct was located downstream of the exit of the contraction nozzle. The cross-section area of the duct was 260mm x 620mm. The test model was vertically fixed on one side of the test duct and LDV/IR camera measurements were made from the opposite side of the test duct. The plenum chamber was connected to the test duct to supply secondary air into the cooling holes from the back side of the test model.

A schematic of the experimental setup and measurement system is illustrated in Figure 5. Hole Block was placed in the test model as shown in this figure, resulting that the center of the cooling hole on the test model surface of the main flow side was located 510mm downstream of the test duct edge. The secondary air was delivered from the inverter-controlled blower and its flow rate was measured by the laminar flow meter. In the thermal measurement, the secondary air was heated by the electric heater after the flow rate measurement. To achieve an abrupt surface temperature change, the secondary air temperature was elevated by about $50\,^{\circ}\mathrm{C}$.

Three types of flat acrylic-resin plates were employed as a side plate opposite to the test model of the duct, for three-dimensional velocity measurement using 3D LDV system, for the IR camera measurement through the infrared-transparent window (ZnSe glass) and for the pressure/temperature measurement with a slot to insert probes into the main flow.

2.4 Measurement Systems and Data Reduction

2.4.1 Steady-State Velocity Measurement

Three-dimensional steady-state flow field downstream of the cooling hole was measured by use of 3D LDV system. This LDV system, Dantec FlowLite System and its high-resolution traverse unit, was fully controlled with the software (BSA Flow). Seeding particles with nominal diameter of $1\,\mu\mathrm{m}$ made by a SAFEX fog generator were first collected in a tank, then fed into the main flow from the slit provided on the test model side of the transition duct upstream of the test duct, as shown in Figure 5. Note that no fog was contained in the secondary flow. The measurement plane was at x/d = 3.0 and its extent was $0 \le y/d \le 2.5$ and $-3.0 \le z/d \le 3.0$. Every measurement point on this plane was equally spaced by 2.0mm in y and z directions. The minimum sampling counts on each point was 750.

2.4.2 Film Effectiveness Measurements

(1) Measurement Principle

This study employed a transient method to obtain film effectiveness. Since the detailed description on the measurement principle has already appeared in the previous paper [10], only a brief explanation on the procedure of the measurement is given in the following.

Suppose that the test model is regarded as semi-infinite body, the temperature rise of the model surface exposed to the main flow whose temperature is monotonously increasing can be expressed, as follows,

$$T_w(t) - T_i = \sum_{j=1}^{N} U(t-\tau_j)(T_{\infty,j} - T_{\infty,j-1}), \qquad (1)$$

Copyright © 2014 by ASME

$$U(t-\tau_j) = 1 - \exp(\phi^2)\,\mathrm{erfc}(\phi), \quad (2)$$

$$\phi = h\sqrt{t-\tau_j} \,/\, \sqrt{\rho c \lambda}, \quad (3)$$

where $T_w(t)$ is the surface temperature, T_i is the model initial temperature, $T_{\infty,j} - T_{\infty,j-1}$ is a small step-like temperature increase of the main flow, τ_j is time lag of the step-like increase from the measurement start. For the case where cooling air is ejected into the main flow, equation (1) can be re-written by substituting adiabatic wall temperature T_{aw} for the main flow temperature,

$$T_w(t) - T_i = \eta \sum_{j=1}^{N} U(t-\tau_j)(T_{2,j} - T_{2,j-1}), \quad (4)$$

where η is the film effectiveness defined by

$$\eta = \frac{T_{aw} - T_\infty}{T_2 - T_\infty} \quad . \quad (5)$$

Specifying two different elapsed instants, t_a and t_b as t in Eq. (4), one can have the following non-linear equation

$$\frac{T_w(t_a) - T_i}{T_w(t_b) - T_i} = \frac{\sum_{j=1}^{N} U(t_a - \tau_j)(T_{2,j} - T_{2,j-1})}{\sum_{k=1}^{N} U(t_b - \tau_k)(T_{2,k} - T_{2,k-1})}, \quad (6)$$

from which heat transfer coefficient h can be numerically determined. Subsequently, film effectiveness is obtained as follows,

$$\eta = \frac{T_w(t_a) - T_i}{\sum_{j=1}^{N} U(t_a - \tau_j)(T_{2,j} - T_{2,j-1})}, \quad (7)$$

(2) Temperature Measurement

Film effectiveness distribution downstream of the center hole was acquired through the transient temperature measurement of the test surface by use of IR camera (NEC Avio H2640). This temperature measurement system was calibrated for each measurement by use of a reference object with a thermocouple on its surface. The secondary air was heated and discharged via the pneumatic-driven three-way valve to the surroundings until its temperature at the valve exit reached a specified value. After the exit secondary air temperature became that value, the secondary air was abruptly diverted by the valve into the plenum chamber, and then ejected from the cooling holes of the test model. The reference temperature used in the definition of film effectiveness as secondary air temperature (T_2) was the averaged value of two temperatures measured at the inlets of cooling holes neighboring the center hole. The target area over which the film effectiveness and heat transfer coefficient were obtained was $0.0 \le x/d \le 10.0$ and $-0.5 \le z/p \le 0.5$ for each Hole Block.

2.4.3 Temperature Field Measurement

To have a better understanding of the effects of DFCDs on the behavior of ejected cooling air, a custom-made temperature rake (multi-thermocouple temperature probe) was traversed in the measurement volume shown in Figure 6. The temperature rake consisted of 13 K-type thermocouples fixed on 5-mm equally spaced slender pins. The measurement volume extended from $x/d = -1.0$ (above the cooling hole) to $x/d = 3.0$, from $y/d = 0.0$ to $y/d = 2.5$ and from $z/d = -3.0$ to $z/d = 3.0$. The traverse step in x direction was $0.5d$ and in y direction was $0.1d$ except on the most-downstream plane, where the step was $0.05d$. The measured temperature T_f was non-dimensionalized as follows,

$$\theta = \frac{T_f - T_\infty}{T_2 - T_\infty}. \quad (8)$$

2.4.4 Total Pressure Loss Measurements

Since some additional aerodynamic loss was anticipated due to the installation of the device on the test model surface, total pressure loss measurements were executed using the total pressure rake developed by Kawabata et al. [10]. The measurement location was at x/d =20.0 and the measurement range was $0.0 \le y/d \le 2.5$ and $-3.0 \le z/d \le 3.0$. The measurement grid spacing was $0.1d$ and $0.5d$ in y and z directions, respectively. The measured total pressure P_t was non-dimensionalized as follows,

$$C_p = \frac{P_{t,ref} - P_t}{\frac{1}{2}\rho_f U_\infty^2}, \quad (9)$$

$$P_{t,ref} = \frac{\dot{m}_2}{\dot{m}_2 + \dot{m}_\infty} P_{t,2} + \frac{\dot{m}_\infty}{\dot{m}_2 + \dot{m}_\infty} P_{t,\infty}. \quad (10)$$

Note that the density ratio during the loss measurements was almost unity.

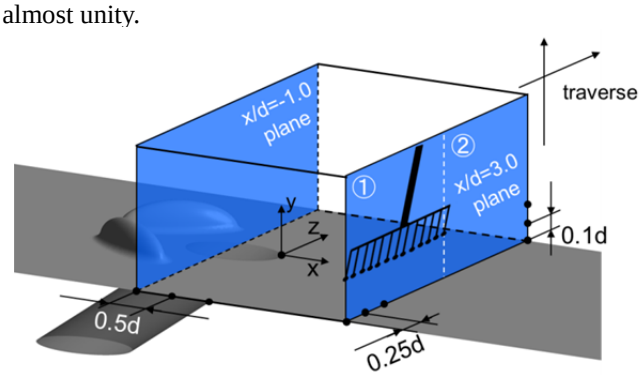

Figure 6 Volume for the temperature field measurement by use of temperature rake

2.5 Test Conditions

All tests were conducted at Re_d = 16400. Inlet freestream turbulence intensity Tu was about 1.0%, measured by a hot-wire probe. Boundary layer thickness at x/d = 0.0 was about $1d$. As for blowing ratio BR, defined by

$$BR = \rho_2 U_2 / \rho_\infty U_\infty, \quad (11)$$

two cases of BR = 0.5 and BR = 1.0 were examined in this study. It should be mentioned that the density ratio of the secondary flow to the main flow, DR, was about unity for

Copyright © 2014 by ASME

the velocity measurement and about 0.85 for the thermal measurement.

2.6 Uncertainty Analysis

Uncertainty analysis was made by use of the method of Kline and McClintock [13]. The uncertainty of the heat transfer coefficient was determined mainly by the accuracy of temperatures of mainstream, secondary air, the model surface in addition to thermal properties of the test model. According to the previous study, considering that errors associated with thermocouple and IR camera were ±0.7K and ±1K, the uncertainty of the heat transfer coefficient was found to be ±6.8%. The uncertainty of the film effectiveness was estimated to be ±9.5% using the uncertainty of heat transfer coefficient. As for the aerodynamics, the accuracy of the pressure transducer was ±0.25%. The uncertainty of total pressure loss coefficient defined by Eq. (9) was about ±3.8%.

3. RESULTS

3.1 Streamwise vorticity

Figure 7 shows contours of streamwise vorticity at x/d = 3.0 for all test cases, where red and blue indicate counter-clockwise (positive) and clockwise (negative) vorticity. Small arrows indicated the centers of cooling holes. The vorticity was calculated by

$$\xi = \frac{\partial w}{\partial y} - \frac{\partial v}{\partial z}. \tag{12}$$

For no secondary air ejection (BR = 0.0), shown at the top of Figure 7, one can clearly confirm the appearance of a pair of vorticies behind each set of DFCDs, referred to as device-based vorticies or DBVs. For p/d = 3.0, there appeared DBVs from the adjacent sets of DFCDs, contacting with DBVs from the center-hole DFCDs around at $z/d = \pm 1.5$, which were almost the middle points between the two neighboring cooling holes. Similar flow events were confirmed for p/d = 4.5, however the contact of DBVs did not happen, instead counter vorticies accompanying DBVs were sandwiched around at the hole-to-hole middle points. It was also found that the position of DBVs from the center-hole DFCDs for p/d = 6.0 was almost the same as that for p/d = 4.5, implying that the lateral movement of DBVs almost reached an asymptotic position under the present main flow condition.

For BR = 0.5, counter-rotating vortex pairs from the cooling hole, called CRVPs, appeared just downstream of the round cooling hole exits (RH). On the other hand, smaller and slightly separated CRVPs were observed downstream of the fan-shaped cooling hole exits (SH). Due to the installation of DFCDs, CRVPs were effectively pushed down towards the model surface and spread out as depicted in circle A by DBVs denoted by circle B.

For BR = 1.0, since CRVPs became larger and were intensified even for SH cases, the effects of DFCDs on CRVP were able to be spotted much easier than for BR = 0.5, especially for CRVPs from SH, resulting in considerable elevation reduction and lateral expansion of CRVPs on the test surface. Note that the favorable effects of DFCDs clearly observed in SH cases could be partially attributed to the occurrence of lift-off because of the relatively short cooling holes in this study.

From the above-mentioned results measured by 3D LDV, reinforced by the relevant numerical simulation using LES which is reported in Part II of this study, dominating flow structures are extracted and illustrated in Figure 8 as a simple flow model around the cooling hole with DFCDs.

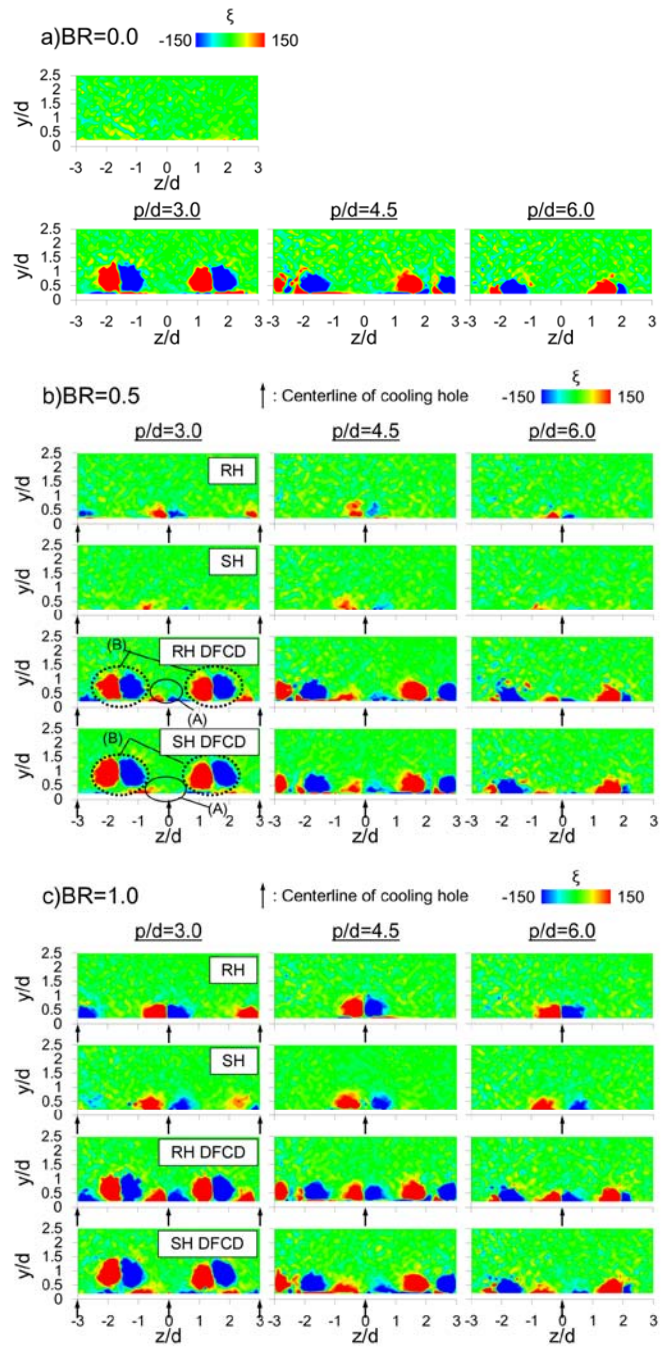

Figure 7 Contours of streamwise vorticity measured at x/d=3.0 by 3D LDV with and without DFCDs for three hole-pitch cases
(RH : round hole exit / SH : fan-shaped hole exit)

Copyright © 2014 by ASME

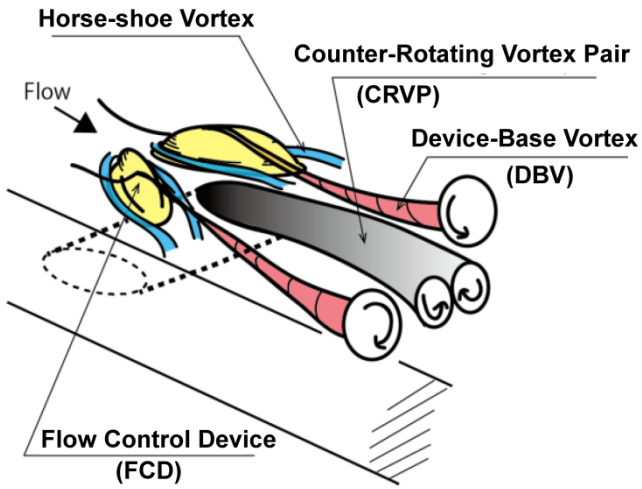

Figure 8 A flow model around the cooling hole with DFCDs

3.2 Film Effectiveness and Temperature Field

3.2.1 BR = 0.5

Figure 9 shows the film effectiveness contours of all test cases for BR =0.5, where the right and left columns are for SH and RH cases with and without DFCDs, respectively. In each contour a vertical line can be seen, which was because of the existence of a small gap between Base and Hole Blocks. It is quite clear that SH cases without DFCDs exhibited wider film-air coverage with higher film effectiveness than the RH cases without DFCDs. The extent of the film-air coverage almost corresponded to the maximum pitchwise width of the cooling hole. The application of DFCDs achieved the considerable expansion of the film-air coverage, maintaining or rather enhancing film effectiveness, especially on the hole centerline of RH cases. For p/d = 3.0, DFCD-affected cooling air covered almost one-pitch zone after x/d = 4 for RH and x/d = 3 for SH. Note that, irrespective of the shape of the hole exit, DFCD-affected film-air coverage became wider than the hole maximum width even at the downstream edge of the hole (x/d = 0.0). This early appearance of lateral expansion of the cooling air was due to DBVs' intense downwash pushing down the cooling air from a upstream part of the hole exit. The relevant discussion will be made later.

The expansion of the film-air coverage was clearly observed for wider hole-pitch cases. Figure 10 depicts lateral distributions of film effectiveness downstream of RH and SH with and without DFCDs for p/d = 6.0 model. From these plots the following several conclusions can be drawn. The film effectiveness of RH with DFCDs became comparable or superior to that of SH without DFCDs, especially away from the hole centerline or far downstream of the hole. Besides, the film effectiveness of SH with DFCDs outperformed the three cases, however, from the comparison between the data at x/d = 3.0 and at x/d = 6.0, the DFCD-affected film effectiveness of RH gradually approached that of SH with DFCDs.

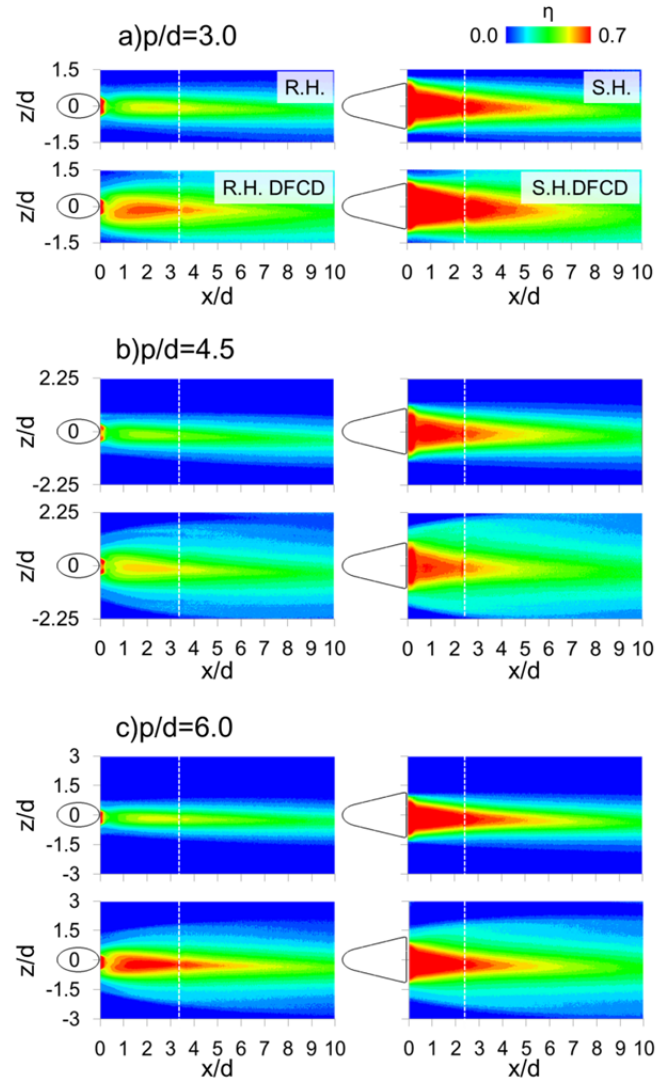

Figure 9 Contours of film effectiveness downstream of round hole (RH) and fan-shaped hole (SH) with and without DFCDs for different hole pitch cases (BR=0.5)

To have a better understanding of how DFCDs affected the cooling air, the direct measurement of the temperature field around the cooling hole was made using the temperature rake. Figure 11 presents some of the temperature contours obtained at x/d = -1.0, -0.5 and 0.0 to grasp the interaction of DBVs with the ejected air from the round hole exit (RH). Vertical dashed lines indicate the pitchwise edges of the cooling hole. Comparisons between the temperature contours with (right) and without (left) DFCDs revealed a noticeable decrease in elevation of the ejected air, which was clearly identified at x/d = -1.0, meaning that the ejected air was surely pushed down to the surface at the early stage of the ejection from the cooling hole. This finding explains the above-mentioned early appearance of lateral expansion of the cooling air shown in Figure 9. Figure 12 exhibits three-dimensional representation of iso-temperature surfaces of θ = 0.6, 0.4, 0.15 around and downstream of the two types of cooling holes with and without DFCDs for p/d = 3.0. This figure also provides clear views of the cooling air spreading over the test surface, which can be regarded as favorable

Copyright © 2014 by ASME

evidence for the installation of DFCDs in front of any types of cooling holes.

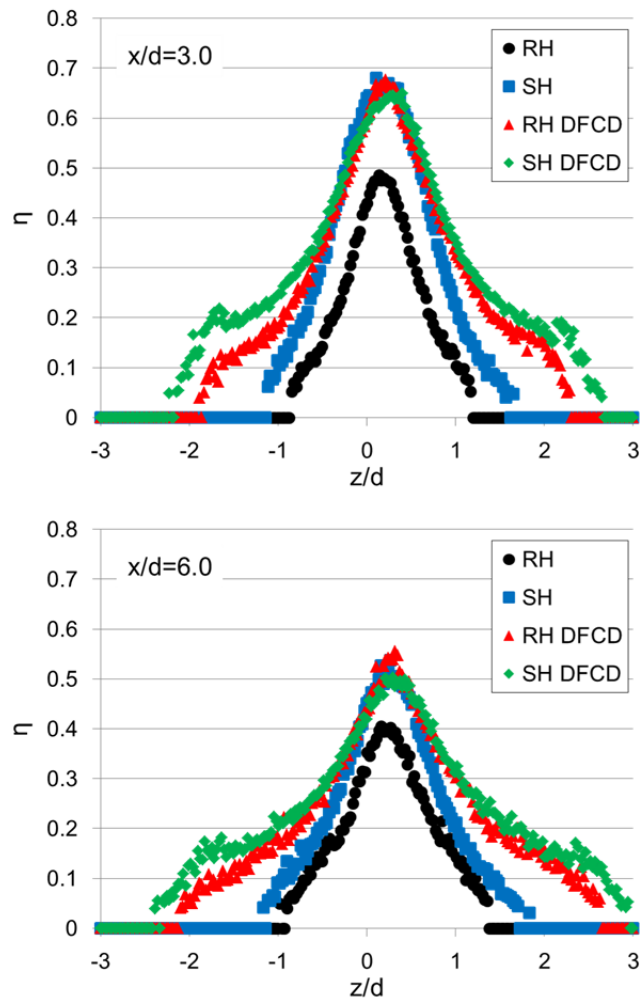

Figure 10 Lateral distributions of film effectiveness downstream of round hole (RH) and fan-shaped hole (SH) with and without DFCDs measured at x/d = 3.0 and 6.0 (p/d = 6.0 model / BR=0.5)

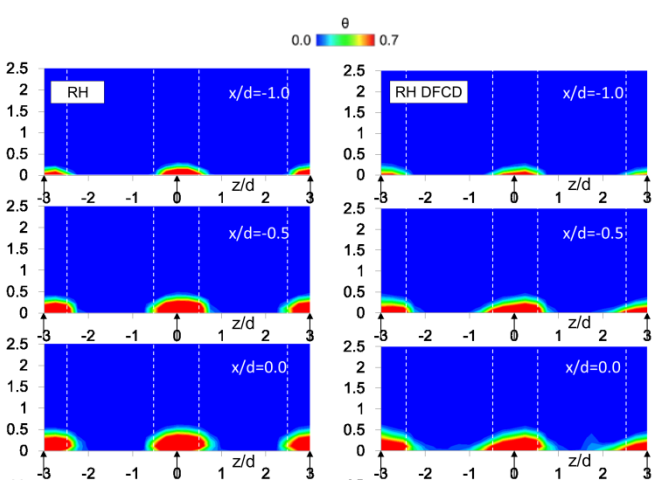

Figure 11 Temperature contours above the round hole (RH) with and without DFCDs for p/d = 3.0 model (BR=0.5) (right : with DFCDs / left : without DFCDs)

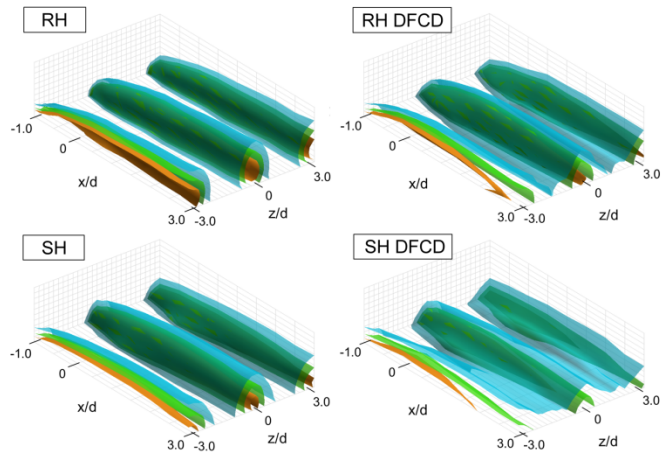

Figure 12 Three-dimensional representation of iso-temperature surfaces (level of 0.15, 0.4 and 0.6) with and without DFCDs for p/d = 3.0 model (BR=0.5)

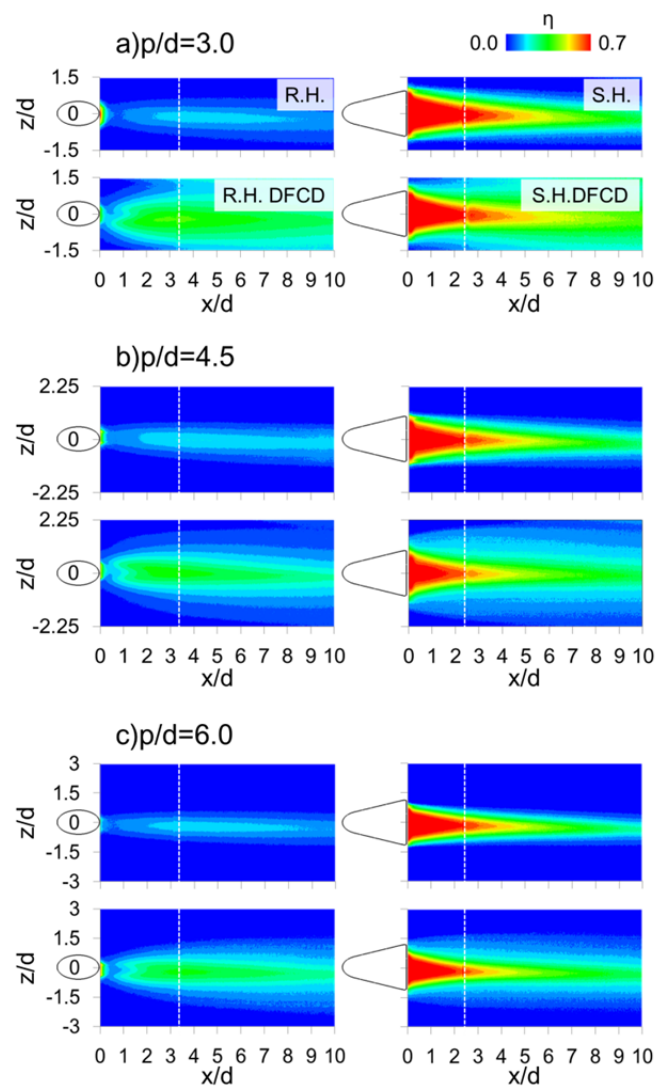

Figure 13 Contours of film effectiveness downstream of round hole (RH) and fan-shaped hole (SH) with and without DFCDs for different hole pitch cases (BR=1.0)

Copyright © 2014 by ASME

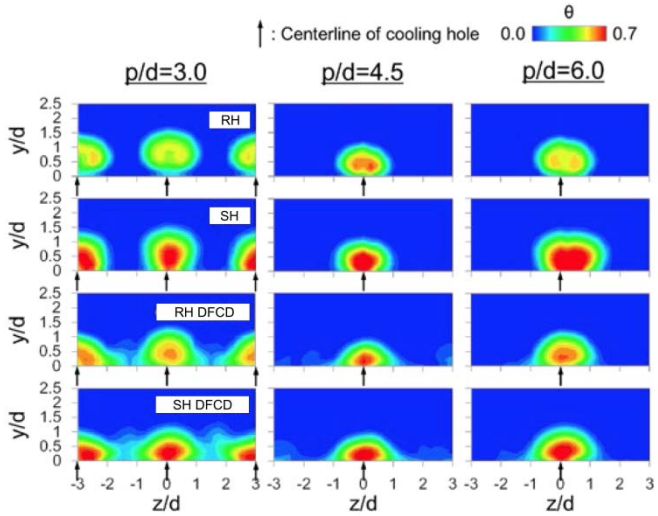

Figure 14 Temperature contours downstream of RH and SH at x/d=3.0 with and without DFCDs for BR=1.0

3.2.2 BR = 1.0

Figure 13 displays the film effectiveness contours of all test cases for BR = 1.0 in a similar manner with Figure 9. Figure 14 shows temperature contours of RH and SH models with and without DFCDs obtained at x/d = 3.0 for three hole-pitch cases. As have been expected from the fact of increased blowing ratio, lift-off of the ejected air from the round hole occurred, accompanied with the appearance of CRVPs inside the ejected air. Moreover, one may notice that the elevation of the air from SH was also enlarged because of the increased blowing ratio, however the bottom part of the ejected air from SH still attached to the model surface due to relatively weak and separated CRVPs as seen in Figure 7, maintaining wide film-air coverage. The effects of DFCDs on the ejected air with larger BR was indisputable so that the lift-off of RH cases was considerably suppressed and the attached area with the ejected air of RH cases expanded to a great extent, as can be seen in the third row of Figure 14. Accordingly, the film-air coverage was drastically increased as shown in Figure 13. Such effects of DFCDs were also clearly confirmed in SH cases.

3.2.3 Laterally-Averaged Film Effectiveness

All measured data of film effectiveness downstream of the center hole were averaged over one hole pitch of each case. The results appear in Figure 15. Note that there occurs discontinuities of the laterally-averaged value because of the small gap between Hole Block and Base Block, however it can be concluded that the gap effect upon the film effectiveness downstream of the gap was negligible. In Figure 15, solid symbols are for BR = 0.5 and open ones are for BR = 1.0. As already mentioned in the above, DFCDs were very effective in improving film effectiveness for all tested cases, although the manner and extent of the improvement due to DFCD depended on hole exit shape, hole pitch and blowing ratio. Regardless of the hole pitch, SH with DFCDs exceeded the others in film effectiveness. Some inspections on each of the data for three pitch hole cases are made as follows.

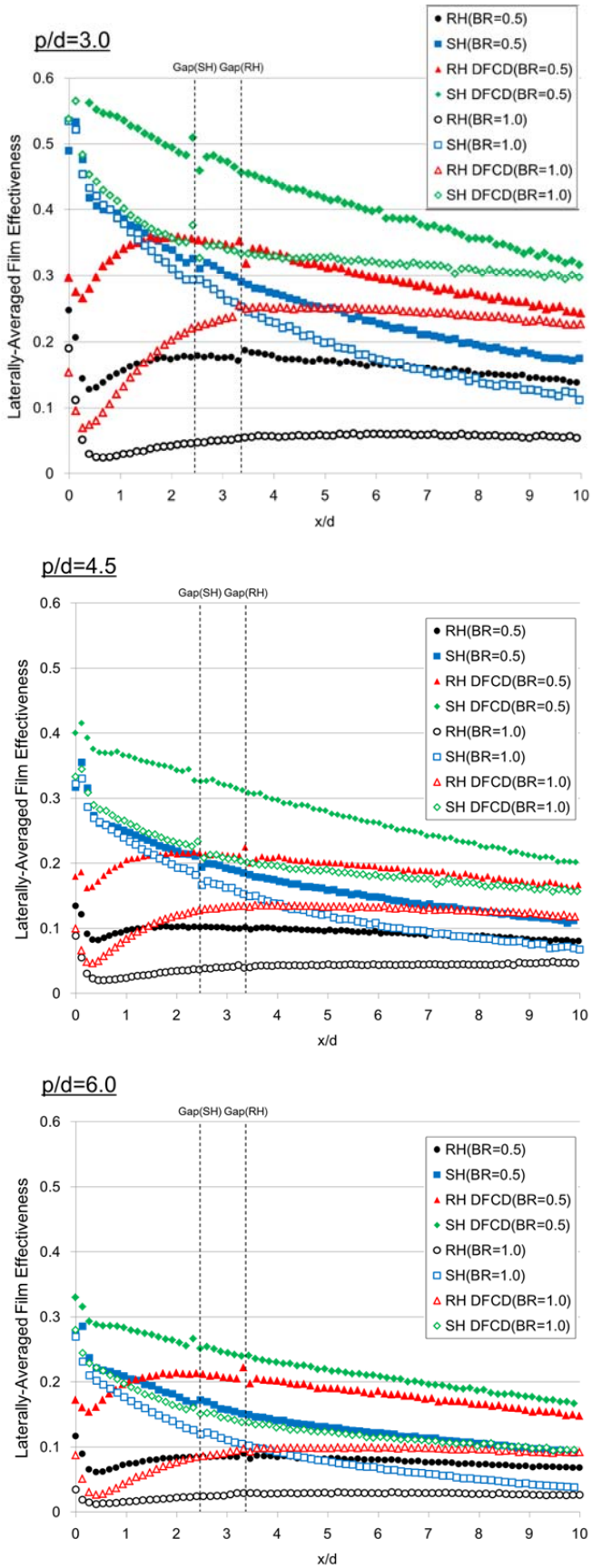

Figure 15 Laterally-averaged film effectiveness of all test cases (Top: p/d=3.0, Middle: p/d=4.5, Bottom: p/d=6.0)

Copyright © 2014 by ASME

For p/d = 3.0, DFCDs increased the film effectiveness of SH by about 0.15 point at BR = 0.5 almost over the measured area, while at BR = 1.0 the favorable effects of DFCDs tended to increase and about 0.15 point gain of film effectiveness was obtained. The film effectiveness of RH with DFVDs was increased by more than 0.15 point, exceeding the film effectiveness of SH with no device at x/d = 2 (BR = 0.5) and x/d = 3.5 (BR = 1.0).

For p/d = 4.5, DFCDs increased the film effectiveness of SH at BR = 0.5 by about 0.1 point near the cooling hole, followed by the decreasing gain of DFCDs down to about 0.05 at the farthest downstream from the hole, while at BR = 1.0 DFCDs' effects tended to increase and about 0.08 point gain of film effectiveness was obtained at x/d = 10. The film effectiveness of RH with DFVDs was increased by about 0.1 point, exceeding the film effectiveness of SH with no device at x/d = 2.5 (BR = 0.5) and x/d = 4.5 (BR = 1.0). For p/d = 6.0, considerable enhancements of the film effectiveness were observed for RH as well as SH. Interestingly, the averaged film effectiveness of RH with DFCDs neared that of SH with DFCDs after some distance from the hole.

As mentioned in the introduction of this paper, one of the objectives of this study was to develop a new FCD for attaining a better cooling performance than a single FCD examined in the previous study [10]. Figure 16 shows the data of laterally-averaged film effectiveness of RH with 50% and 75% off-set single FCD (Case 03 and Case 04, respectively), in comparison with the corresponding data of RH with and without DFCDs. It is found that DFCDs always yielded higher film effectiveness than the single FCD.

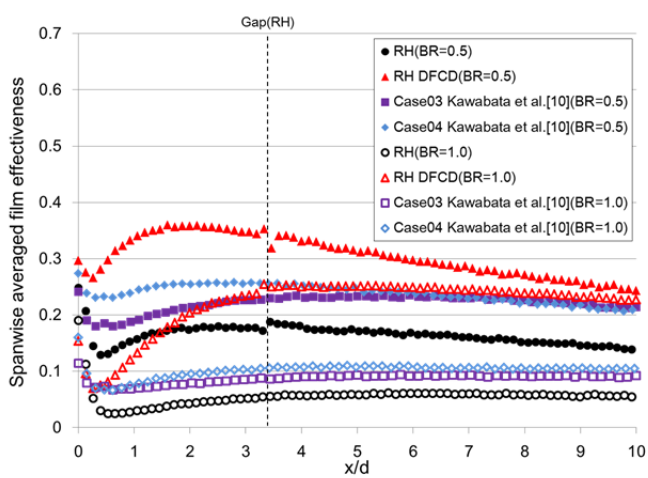

Figure 16 Comparisons between laterally-averaged film effectiveness of RH with DFCDs and single FCD (p/d=3.0)

3.2.4 Area-Averaged Film Effectiveness

To explore a possibility of reduction in cooling air consumption, area-averaged film effectiveness η_A was calculated for all test cases and compared each other as shown in Figure 17. The averaging area was $0.0 \le x/d \le 10.0$ over one hole pitch. The ordinate of the plots in Figure 17 is the area-averaged film effectiveness normalized by that of RH of p/d = 3.0 for each blowing ratio. As can be inferred from the above-mentioned discussions, η_A of SH with DFCDs outperformed the other three test cases for both blowing ratios. For BR = 0.5, η_A of RH with DFCDs exceeded that of SH with no device, while for BR = 1.0 vice versa. What is also worthy of mentioning is that η_A of SH with DFCDs for p/d = 4.5 was larger than η_A of SH DFCDs for p/d = 3.0, which implies that the application of DFCDs to SH cases may be able to widen hole pitch (i.e. reduce hole number) while maintaining almost the same level of area-averaged film effectiveness over the one pitch.

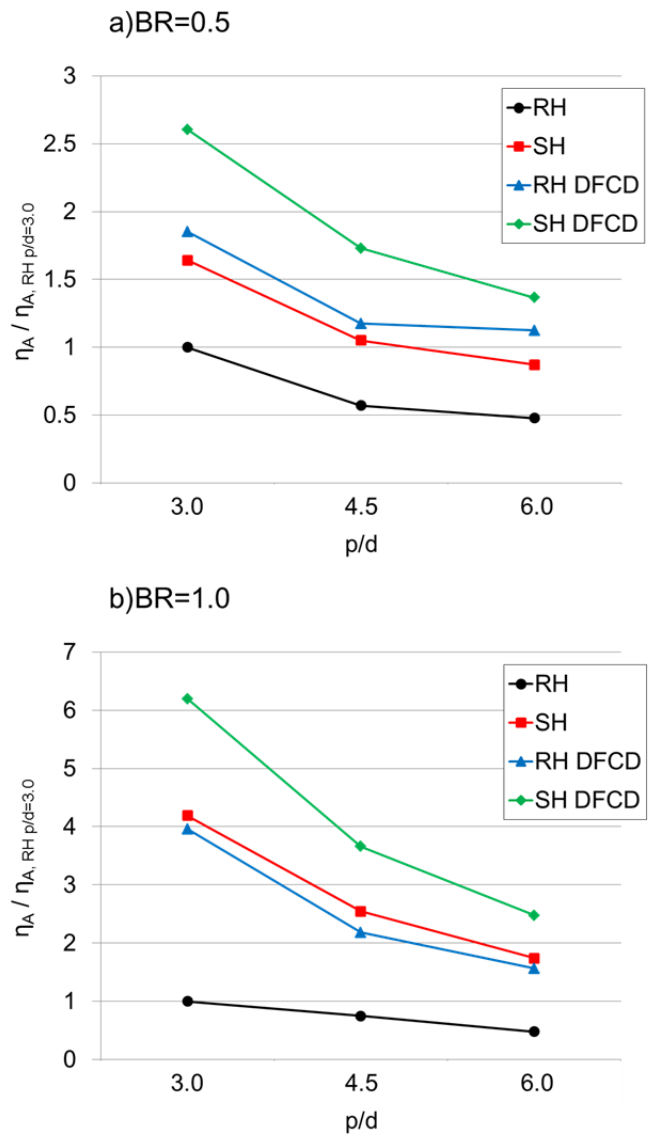

Figure 17 Area-averaged film effectiveness of all test cases (Top: BR=0.5, Bottom: BR=1.0)

3.3 Total Pressure Loss

Figure 18 depicts contours of total pressure loss coefficient for all test cases including one without DFCDs. The loss measurement location was at x/d = 20. Mass-averaged total pressure loss coefficients of various test models are shown in Figure 19 with the blowing ratio as parameter for the three hole-pitch cases, where those loss

Copyright © 2014 by ASME

coefficients were normalized by the loss of BR = 0.0 for each hole-pitch case. The mass-averaged total pressure loss coefficient was calculated by the following equation, in consideration of incompressibility of the flow,

$$\zeta = \frac{\iint C_p \rho U dA}{\iint \rho U dA} = \frac{\iint C_p U dA}{\iint U dA}. \quad (13)$$

Note that the cooling holes were covered with very thin adhesive tapes at the measurement for BR = 0.0.

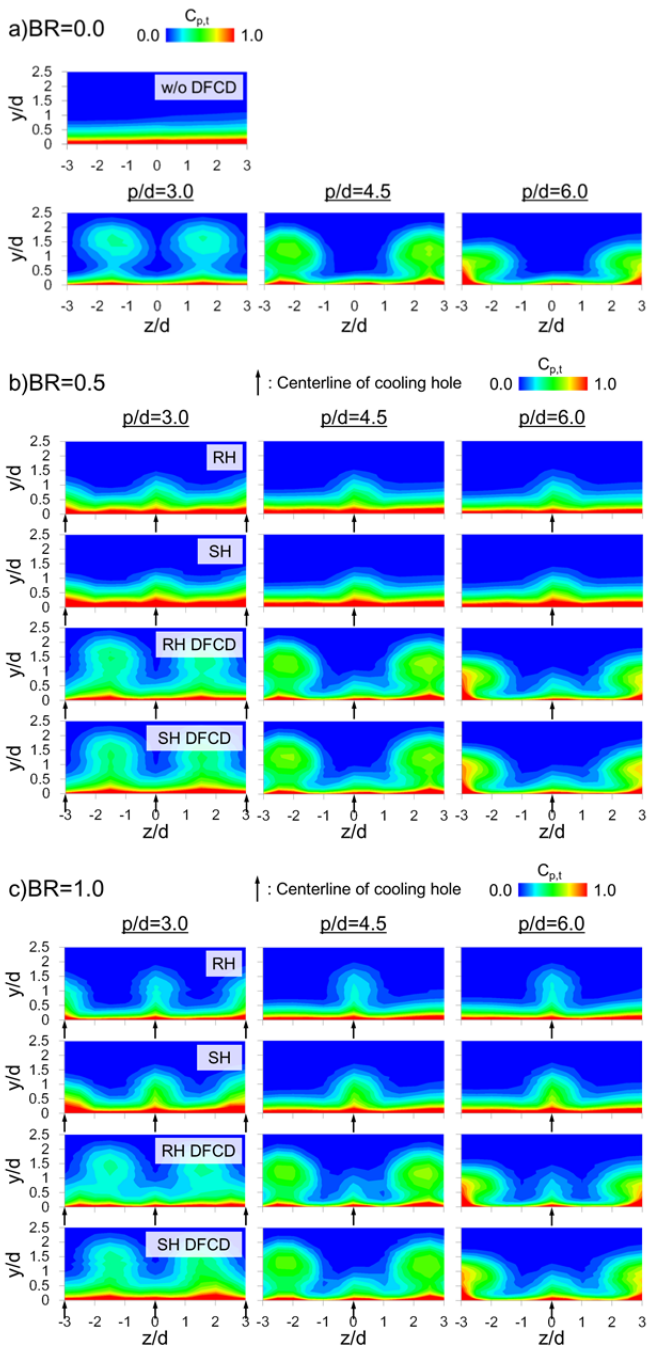

Figure 18 Contours of total pressure loss coefficient for all test cases (Top: p/d=3.0, Middle: p/d=4.5, Bottom: p/d=6.0)

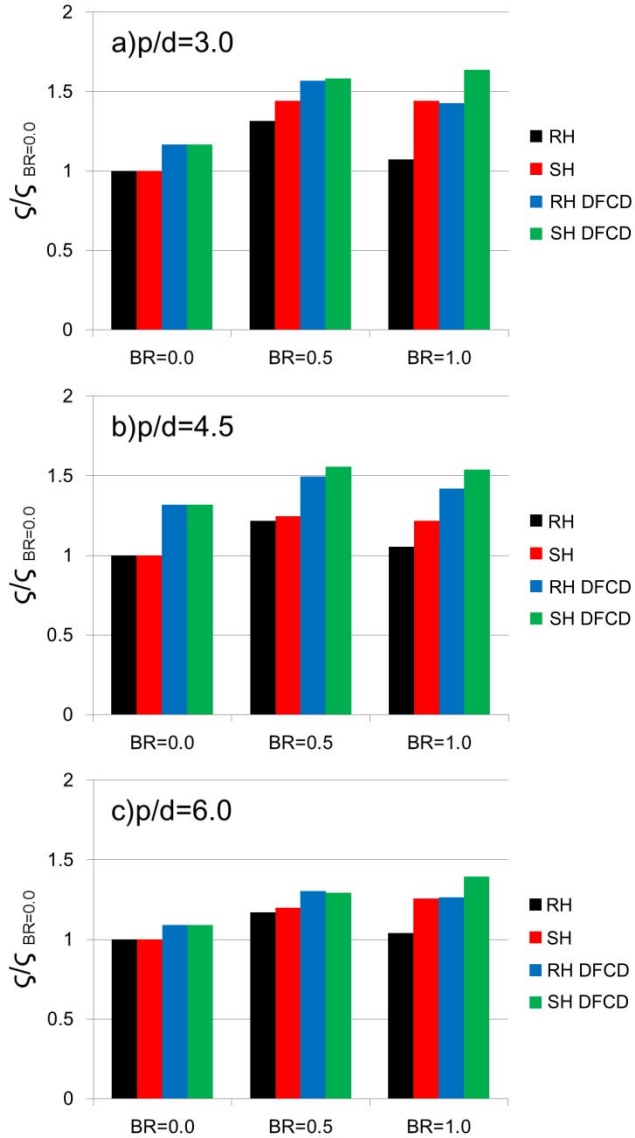

Figure 19 Normalized mass-averaged total pressure loss coefficients for all test cases (Top: p/d=3.0, Middle: p/d=4.5, Bottom: p/d=6.0)

The contours on the top of Figure 18 (BR = 0.0) indicate that high-loss plumes appeared around at the middle between the neighboring cooling holes, i.e., $z/d = \pm 1.5, \pm 2.25, \pm 3.0$ for p/d =3.0, 4.5, 6.0, respectively, while the wall boundary layer became thinner between the plumes. As already seen in the contours of streamwise vorticity of Figure 7, the center hole DBVs (device-base vorticies) collided the neighboring holes' DBVs at $z/d = \pm 1.5$ for p/d = 3.0, resulting in upward movement around there. For p/d = 4.5 and 6.0, although the direct contact of DBVs from two neighboring holes could not be observed at x/d = 3.0 in Figure 7, the loss regions of DBVs tended to move laterally due to the induced velocity field around DBVs. Therefore, the loss plumes were composed of the loss associated with DBVs and the loss inside the boundary layer trapped by DBVs. The loss contours for BR = 0.5 and 1.0 clearly reveal the occurrence of the additional loss regions due to the

Copyright © 2014 by ASME

ejected air, whose size and loss level tended to increase with the blowing ratio. It was also found that the loss associated with SH was in general larger than that of RH, especially for higher blowing ratio case.

As for the mass-averaged total pressure loss, it can be roughly mentioned from Figure 19 that DFCDs with no cooling air induced additional total pressure loss, and since the cooling air from the holes into the main flow was also accompanied with some loss increase, DFCDs with cooling air generated higher loss. It was also found that the loss increase from the loss level with no cooling air depended on the test conditions in a non-straightforward manner, reflecting complicated flow physics there. For each of three hole-pitch cases, the loss due to the cooling air from SH was the larger than that of RH, irrespective of the blowing ratio and this was almost the case even when DFCDs were employed. Interestingly, the air ejection with higher blowing ratio tended to reduce the total pressure loss especially for RH cases, regardless of the existence of the device. Similar findings were reported by Saha et al. [14].

4. CONCLUSIONS AND FUTURE WORK

This paper described the experimental investigations of double flow control devices (DFCDs) to enhance film effectiveness of cooling holes with conventional round hole exit (RH) or fan-shaped hole exit (SH), where the hole pitch ratios p/d =3.0, 4.5 and 6.0. Detailed measurements, with fixed Reynolds number and two blowing ratios, were made using 3D LDV, IR camera, temperature rake and total pressure rake to understand time-averaged velocity field, film effectiveness, temperature field and total pressure loss around and downstream of the cooling holes with and without DFCDs, respectively.

Generally speaking, DFCDs created a pair of counter-rotating vorticies behind them, inducing intense downwash towards the ejected air from the cooling hole. This downwash was very effective in suppressing the lift-off of the ejected air, at the same time, in spreading the air laterally. Consequently, the film-air coverage was significantly improved, bringing about considerable increase in film effectiveness for all tested cases, whereas some additional penalty associated with the application of the device had to be paid in terms of total pressure loss increase. More detailed important findings in this study are listed as follows,

1. BR = 0.5

(1) RH with DFCDs exhibited much better area-averaged film effectiveness than RH with no device and slightly better performance than SH with no device, irrespective of the hole pitch. Especially, the film effectiveness of RH with DFCDs for p/d = 6.0 was greater than that of RH without DFCDs for p/d = 3.0, implying a possibility of hole number reduction, i.e., reduction in cooling air consumption. As for the film-air coverage, RH with DFCDs outperformed SH with no device after x/d = 2 in terms of laterally-averaged film effectiveness.

(2) SH with DFCDs, in comparison with SH with no device, provided considerable enhancement of area-averaged as well as laterally-averaged film effectiveness for all hole pitch cases. As a result, area-averaged film effectiveness of SH with DFCDs for p/d =4.5 became larger than that of SH with no device for p/d =3.0, indicating a possibility of cooling air consumption through the hole number reduction.

(3) The aerodynamic penalty due to DFCDs was large, especially for SH cases compared to no air-ejection cases. However, since the air-ejection itself induced the total pressure loss, the loss increase ratios of SH due to the application of DFCDs were relatively small for BR = 0.5 and 1.0 in comparison with the ratios for BR = 0.0.

2. BR = 1.0

(1) Due to the increased momentum, the ejected air from RH was likely to lift off from the surface in this case. DFCDs were effective in suppressing the lift-off so that the cooling performance of RH was considerably improved, however the area-averaged film effectiveness was slightly lower than that of SH.

(2) SH with DFCDs again provided considerable enhancement of area-averaged as well as laterally-averaged film effectiveness for all hole pitch cases.

(3) Although the total pressure loss increase due to DFCDs was still noticeable, it was not drastically increased in comparison with BR = 0.5 cases. In addition, the loss increase of RH with DFCDs in this case was rather lower than that of RH for BR = 0.5

It has been found through this study that DFCDs are very useful for enhancing film effectiveness from the cooling hole with not only round but also fan-shaped exit. It should be mentioned, however, that there may exist a number of advanced hole exit shapes which can yield better cooling performance than even the fan-shaped hole exit employed in this study, as examined in [15]. A study is just started using CFD, which will be followed by measurements, to confirm whether DFCDs can work on those advanced cooling holes and a preliminary trial has exhibited a favorable result for DFCDs. Further relevant studies will be continued, along with the optimization of the device as shown in Part II study, where a trial is made to optimize the shape and arrangement of DFCDs using Taguchi Method.

Lastly, it should be also stated that there are several difficulties associated with DFCDs to be overcome before the application to a real turbine vane/blade. One of them is durability of DFCDs and another study is now under way to develop a method than can protect DFCDs from a hostile hot-gas flow in gas turbines.

ACKNOWLEDGMENTS

This research and development has received funding for advanced technology development for energy use rationalization from the Electricity and Gas Industry Department of the Agency for Natural Resources and Energy

Copyright © 2014 by ASME

at the Ministry of Economy, Trade and Industry, Japan. The authors would like to express their sincere thanks to the organizations.

NOMENCLATURE

BR	: blowing ratio
c	: specific heat of test model
C_p	: total pressure loss coefficient
d	: diameter of cooling hole
DR	: density ratio (= ρ_2 / ρ_∞)
h	: heat transfer coefficient
L	: hole length
$\dot{m}$	: mass flow rate
p	: hole pitch
P, P_t	: static pressure, total pressure
Re_d	: incoming flow Reynolds number based on hole diameter (= $U_\infty d / \nu_\infty$)
T	: temperature
Tu	: turbulence intensity (= $\sqrt{\overline{u'^2}} / U_\infty$)
t	: time
u, v, w	: velocity components
u'	: streamwise velocity fluctuation
x, y, z	: coordinates (streamwise, heightwise, lateral)
U_∞	: incoming flow velocity
α	: hole axis angle
β	: laid-back angle
γ	: semi-lateral expansion angle from the hole centerline
λ	: thermal conductivity of test model
ν	: kinematic viscosity
η	: film effectiveness (= $(T_{aw} - T_\infty) / (T_2 - T_\infty)$)
θ	: non-dimensional temperature
ρ	: density of test model
τ_j	: time lag
ξ	: streamwise vorticity
ζ	: mass-averaged total pressure loss coefficient

Abbreviation

CRVP	: Counter-Rotating Vortex Pair
DBV	: Device-Based Vortex
DFCD	: Double Flow-Control Device
FCD	: Flow-Control Device
IR	: Infrared
LDV	: Laser-Doppler Velocimetry
RH	: Round Hole
SH	: Shaped Hole

Subscript

A	: area-averaged
$\infty, 2$	: main flow, secondary flow
aw, i	: adiabatic wall condition, initial condition
f, w	: fluid, wall

REFERENCES

[1] Goldstein, R.J., Eckert, E.G., and Burggraf, R., 1974, "Effects of Hole Geometry and Density on Three Dimensional Film Cooling," International Journal of Heat and Fluid Flow, Vol. 17, pp. 595-606.

[2] Saumweber, C., Schulz, A., 2012, "Free-stream Effects on the Cooling Performance of Cylindrical and Fan-shaped Cooling Holes," ASME Journal of Turbomachinery, Vol. 136(6).

[3] Saumweber, C., Schulz, A., 2012, "Effect of Geometry Variations on the Cooling Performance of Fan-shaped Cooling Holes," ASME Journal of Turbomachinery, Vol. 136(6).

[4] Na, S., Shih, T., 2007, "Increasing adiabatic film-cooling effectiveness by using an upstream ramp," ASME Journal of Heat Transfer, Vol. 129, pp. 464-471.

[5] Barigozzi, G., Franchini, G., and Perdichizzi, A., 2007, "The Effect of an Upstream Ramp on Cylindrical and Fan-shaped Hole Film Cooling, Part1: Aerodynamic Results, " ASME Paper GT2007-27077.

[6] Barigozzi, G., Franchini, G., and Perdichizzi, A., 2007, "The Effect of an Upstream Ramp on Cylindrical and Fan-shaped Hole Film Cooling, Part 2; Adiabatic Effectiveness Results," ASME Paper GT2007-27079.

[7] Nasir, H., Acharya, S., Ekkad, S., 2003, "Improved Film Cooling from Cylindrical Angled Holes with Triangular Tabs: Effect of Tab Orientations," International Journal of Heat and Fluid Flow, Vol. 24, pp. 657-668.

[8] Bunker, R.S., 2005, "A Review of Turbine Shaped Film Cooling Technology," Journal of Heat Transfer, Vol. 127, pp. 441-453.

[9] Bunker, R.S., 2009, "Film Cooling: Breaking the Limits of Diffusion Shaped Holes," Proceedings of International Symposium on Heat Transfer in Gas Turbine Systems Turbine-09 (Turkey).

[10] Kawabata, H., Funazaki, K., Nakata, R., Takakashi, D., 2013, "Experimental and Numerical Investigations of Effects of Flow Control Devices upon Flat-Plate Film Cooling Performance," ASME Journal of Turbomachinery, Vol. 136(6).

[11] Renze, P., Schroder, W,. Meinke, M., 2009, "Large-Eddy Simulation of Interacting Film Cooling Jets", ASME paper GT2009-59164.

[12] Sakai, E., Takahashi, T. and Agata, Y., 2012, "Experimental Study on Effects of Internal Rib and Rear Bump on Film Effectiveness," ASME Paper GT2012-68268.

[13] Kline, S.J. and McClintock, F.A., 1953, "Describing Uncertainties in Single Sample Experiments," Mechanical Engineering, Vol. 75, pp. 3-8.

[14] Saha, R., Fridh, J., Fransson, T., Mamaev, B.I. and Annerfeldt, M., 2013, "Suction and Pressure Side Film Cooling Influence on Vane Aero Performance in A Transonic Annular Cascade," ASME Paper GT2013-94319.

[15]Colban, W.F., Thole, K.A. and Bogard, D., 2008, "A Film-Cooling Correlation for Shaped Holes on a Flat-Plate Surface," ASME Paper GT2008-50121.

Copyright © 2014 by ASME